ASAHI AV

FLOW METER

P.193 ULTRASONIC-VOLTEX FLOW METER ASUSV SERIES

P.195 IMPELLER FLOW METER ASIP80 SERIES

P.196 IMPELLER FLOW METER ASSPX SERIES

P.197 INSERTION ELECTROMAGNETIC FLOW METER ASEX80 SERIES

P.198 ULTRASONIC FLOW METER – DOPPLER ULTRASONIC FLOW METER

P.198 • ASDX-25 STATIONARY

P.198 • ASPX-20 PORTABLE

P.199 • ASSX-30 PORTABLE

P.199 • ASSX-40 STATIONARY

P.200 ULTRASONIC FLOW METER – TIME DIFFERENCE ULTRASONIC FLOW METER

P.200 • ASISTT-D6000 (S/M/L) STATIONARY

P.200 • ASISTT-D7000 PORTABLE

P.200 • ASISTT-D9000 AFFORDABLE TYPE

ULTRASONIC-VOLTEX FLOW METER ASUSV SERIES

- THE WETTED PART IS MADE OF CORROSION-RESISTANT ALL-PLASTIC MATERIAL (ANTI-CORROSIVE RESIN), MAKING THE METER IDEAL FOR CHEMICAL SOLUTION LINES FOR CHEMICAL, STEEL, ELECTROLYSIS, SEMICONDUCTOR AND PURIFICATION FACILITIES.
- STABLE AND HIGHLY ACCURATE FLOW MEASUREMENT WITH AN ACCURACY OF +/-1.0% (RD).
- KARMAN VORTEX DETECTION USING ULTRASONIC SENSOR PROTECTED FROM THE EFFECTS OF MECHANICAL NOISES SUCH AS PIPE VIBRATION.

BASIC SPECIFICATIONS

VALVE TYPE		ULTRASONIC-VOLTEX FLOW METER ASUSV SERIES
CONNECTION METHOD		FLANGED, WAFER
SIZE		FLANGED ····· 20—50 mm WAFER ····· 20—100 mm
VALVE PARTS	WETTED PARTS	FLANGED ····· PVDF WAFER ····· U-PVC, PVDF
	MEASUREMENT ACCURACY	±1% R.D
	FLUID TEMPERATURE	U-PVC ····· 0～ 55°C PVDF ····· -10～100°C
	MAXIMUM WORKING FLUID PRESSURE	1.0 MPa (at normal temp.)
SENSOR PARTS	DISPLAY	TOTAL INTEGRATING / INSTANTANEOUS FLOW RATE / % FLOW RATE / RESET INTEGRATING FLOW RATE (The display is switched by a magnet from the outside.)
	ANALOG OUTPUT	4 - 20 mA, TWO-WIRE, LOAD RESISTANCE: 300Ω MAX.
	ALARM OUTPUT	<OPEN COLLECTOR OUTPUT> INTEGRATING PULSE OUTPUT / UPPER AND LOWER LIMIT OUTPUT / ALARM OUTPUT Either can be selected.
	CASE MATERIAL	Polycarbonate
	POWER SOURCE	DC 24V ±10%
	AMBIENT TEMPERATURE	U-PVC ····· 0～55°C, 5～80%RH PVDF ····· -10～60°C, 5～80%RH
	PROTECTIVE STRUCTURE	IP 66 equivalent. (Avoid direct sunlight.)

MEASURING RANGE AUTOMATIC

SIZE (mm)	MINIMUM FLOW RATE (m^3/h) <MEASUREMENT ACCURACY: ±1.0%RD > KINEMATIC VISCOSITY x 10^{-6} m^2/s (cst)					MAXIMUM FLOW RATE (m^3/h)
	1	2	3	4	5	
20	0.9	1.8	2.7	3.6	4.5	5.4
25	1.4	2.8	4.2	5.6	7	8.5
40	3.6	7.2	10.8	14.4	18	22
50	5.9	11.8	17.7	23.6	29.5	34
80	13.4	26.8	40.2	53.6	67	88
100	22.6	45.2	67.8	90.4	113	137
FLOW RATE	0.8m/sec	1.6m/sec	2.4m/sec	3.2m/sec	4.0m/sec	5.0m/sec

NOTES To maintain the measurement accuracy, provide a straight pipe of 10D on the upper-flow side and of 5D in the downstream. (D = Inside pipe diameter)

INSTALLATION EXAMPLE (WAFER)

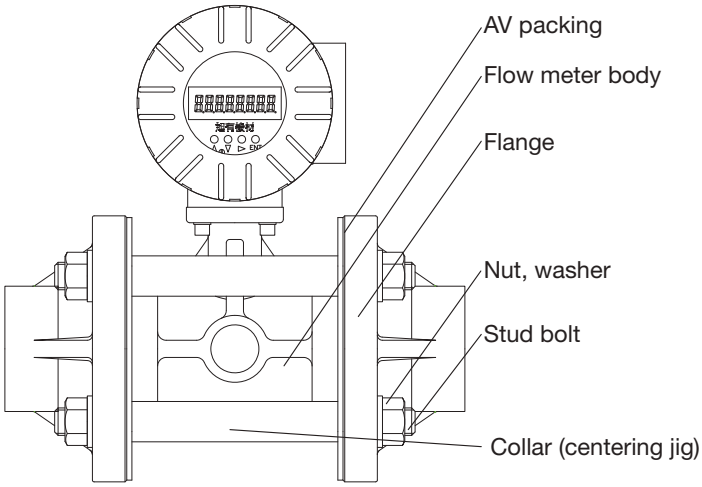

TIGHTENING TORQUE [N·m]	20mm	25mm	40mm	50mm	80mm	100mm
U-PVC	15	15	20	25	30	30
PVDF	15	15	20	25	30	30

AUTOMATIC

ULTRASONIC-VORTEX FLOW METER ASUSV SERIES

CONNECTION / FLANGED, WAFER——JIS

WAFER

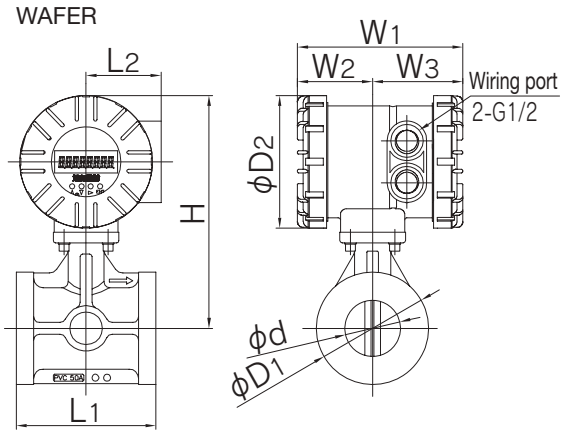

FLANGED

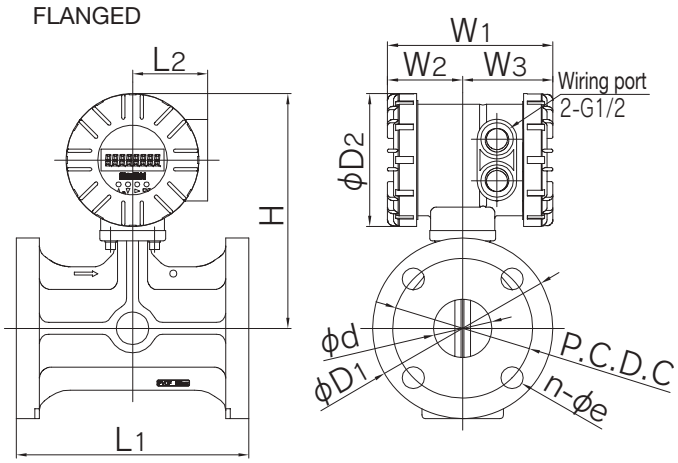

JIS (Unit: mm)

mm	L_2	W_1	W_2	W_3	ϕD_2	WAFER L_1	WAFER H	WAFER ϕD_1	WAFER ϕd	FLANGED (JIS10K) L_1	FLANGED H	FLANGED ϕD_1	FLANGED ϕd	FLANGED C	FLANGED n	FLANGED e
20	64.5	138	62.5	75.5	114	85	187.5	53	19	200	180	100	19	75	4	15
25						93	190	62	24		190	125	24	90		19
40						106	197.5	77	38.5		197	140	38.5	105		
50						120	202.5	96.5	48.5		204	155	48.5	120		
80						160	225	127	72.5	-	-	-	-	-	-	-
100						180	239.5	155.5	94	-	-	-	-	-	-	-

IMPELLER FLOW METER ASIP80 SERIES

- INSERTION TYPE USING SPECIAL FITTING.
- ALL THE WETTED PARTS ARE MADE OF CHEMICAL-RESISTANT PLASTIC (SO THAT THE METER CAN BE USED FOR SEA WATER LINES AND VARIOUS CHEMICAL SOLUTION LINES).

AUTOMATIC

BASIC SPECIFICATIONS

VALVE TYPE		IMPELLER FLOW METER ASIP80 SERIES	
SIZE		ASIP81(P/Y/K) ····· 15mm～80mm ASIP82(P/Y/K) ····· 100mm～150mm	
CONNECTION METHOD		SOCKET, FLANGED	
MATERIAL	SENSOR BODY	WORKING TEMPERATURE	HI-PVC ·····50°C PP·····60°C PVDF ·····90°C
		WORKING PRESSURE	1.0MPa
	IMPELLER	PVDF	
	SHAFT	ZIRCONIUM, SILICON-CARBIDE	
	BEARING	RUBY	
	O-RING	FKM(EPDM)	
	SPECIAL FITTING	U-PVC, HI-PVC, C-PVC (See TABLE 1.)	
MEASUREMENT FLUID		FLUID (EXCEPT HIGH VISCOSITY FLUID AND SLURRY)	
MAXIMUM WORKING TEMPERATURE		0～90°C	
FLOW RATE		0.2 - 9 m/s (See TABLE 2.)	
RANGEABILITY		1:45	
MEASUREMENT ACCURACY		±1.5%(FS)	
POWER SOURCE		DC6 – 24V (Consumption current: 8 mA)	
OUTPUT SIGNAL		3-WIRE, CURRENT SINKING PULSE (NPN) (20 mA Max.)	
CABLE		3-CON (3.6 m length)	
FITTING INSTALLATION		Upper flow: 10D Min. Downstream: 5D Min. (D: Inside pipe diameter)	

TABLE 1 MAX. OPERATING FLUID PRESSURE AND TEMPERATURE FOR SPECIAL FITTING

TEMP. (°C)	PRESSURE (MPa)		
	U-PVC HI-PVC	C-PVC	
	15mm ~ 150mm	15mm ~ 50mm	65mm ~ 150mm
20	1	1	1
30	0.9	1	0.8
40	0.7	1	0.8
50	0.3	0.6	0.6
60	–	0.6	0.6
70	–	0.4	0.4
80	–	0.2	0.2
90	–	0.2	0.2

TABLE 2 MEASURING RANGE AND K-FACTOR

SIZE (mm)	FLOW RATE (m^3/h) Min	～	Max	K-FACTOR (cc/pulse)
15	0.14	～	6.51	7.1
20	0.23	～	10.18	10.9
25	0.35	～	15.89	16.1
32	0.54	～	24.44	26.8
40	0.90	～	40.69	47.2
50	1.47	～	66.16	66.2
65	2.54	～	114.17	102.2
80	3.35	～	150.80	139.7
100	5.65	～	254.34	213.0
125	8.83	～	397.40	355.4
150	12.05	～	542.15	465.0

NOTES (1) The value of K-factor is only a reference value.
(2) Obtain the maximum frequency for each size by calculation.
Max. frequency = Max. flow rate / K-factor
(Hz) (cc/s) (cc/pulse)

AUTOMATIC

IMPELLER FLOW METER ASIP80 SERIES

CONNECTION / FLANGED, SOCKET——JIS

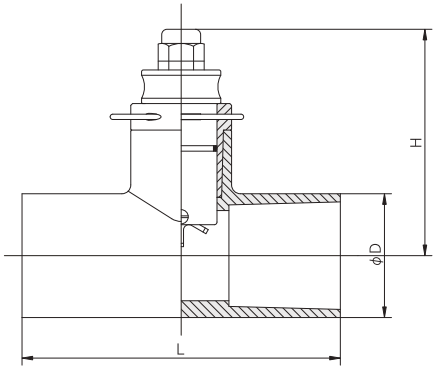

● FLANGED

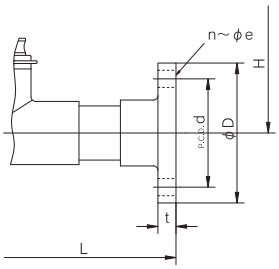

■ JIS (Unit: mm)

mm	SOCKET U-PVC/HI-PVC L	H	D	U-PVC/HI-PVC L	H	D	FLANGED L	H	JIS 10K D	d	t	n	e	JIS 5K D	d	t	n	e
15	164	119	57	150	119	56	500	119	95	70	14	4	15	80	60	9	4	12
20	164	121	57	150	121	56	500	121	100	75	15	4	15	85	65	10	4	12
25	164	121	57	150	121	56	500	121	125	90	15	4	19	95	75	10	4	12
32	164	122	57	150	122	56	500	122	135	100	16	4	19	115	90	12	4	15
40	164	125	57	150	125	56	500	125	140	105	16	4	19	120	95	12	4	15
50	180	128	70	164	128	69	500	128	155	120	20	4	19	130	105	14	4	15
65	190	133	87	190	133	87	500	133	175	140	22	4	19	155	130	14	4	15
80	200	136	102	200	136	102	500	136	185	150	22	8	19	180	145	14	4	19
100	250	168	130	250	168	130	700	168	210	175	22	8	19	200	165	16	8	19
125	322	176	157	-	-	-	700	176	250	210	24	8	23	235	200	16	8	19
150	390	182	186	-	-	-	700	182	280	240	26	8	23	265	230	18	8	19

NOTES (1) Piping condition) It is recommended to secure a fitting installation section of 10D on the upper flow side and 5D in the downstream. (D = Inside pipe diameter)
Wiring condition) For wire extension, it is recommended to use shielded wires. (2) For display of flow rate, an indicator is required separately.
(3) The appearance and shape of assembled parts may slightly differ from the diagram depending on the sizes. (4) Note that the following fittings are not available:
Socket, JIS10K flange……HI-PVC/C-PVC (125 mm, 150 mm) JIS 5K flange……HI-PVC (125 mm, 150 mm), C-PVC (80 mm – 150 mm)

IMPELLER FLOW METER ASSPX SERIES

- CORROSION-RESISTANT FLOW METER FOR LOW FLOW RATES.
- COMPACT DESIGN IDEAL FOR PIPING IN MACHINERY.

BASIC SPECIFICATIONS

VALVE TYPE		IMPELLER FLOW METER ASSPX SERIES
CONNECTION METHOD		ASSPX-3/8inch·····Rc 3/8 ASSPX-1/2inch·····Rc 1/2 ASSPX-3/4inch·····Rc 3/4 ASSPX-1inch·····Rc 1
MATERIAL	BODY MATERIAL	PP, PTFE
	COVER	PP, PTFE (Acrylic)
	ROTOR	PVDF
	SHAFT	ZIRCONIUM, SILICON-CARBIDE
	BEARING	RUBY
	O-RING	FKM, (EPDM)
MEASUREMENT FLUID		FLUID (EXCEPT HIGH VISCOSITY FLUID AND SLURRY)
MAXIMUM WORKING TEMPERATURE		–10~70°C
WORKING PRESSURE		1.0MPa
FLOW RATE		See TABLE 1.
MEASUREMENT ACCURACY		±1%(FS)
POWER SOURCE		DC 6 – 24V (Consumption current: 8 mA)
OUTPUT SIGNAL		3-WIRE, CURRENT SINKING PULSE (NPN) (20 mA Max.)
CABLE		3-CON (3.6 m length)

AUTOMATIC

TABLE 1 MEASURING RANGE AND K-FACTOR

CONNECTION SIZE	INSTALLATION POSTURE	FLOW RATE (L/min)	RANGE ABILITY	K-FACTOR (cc/pulse)
3/8 inch	PIPING IS HORIZONTAL AND SHAFT IS VERTICAL	0.2~ 20	1:100	1.122
	OTHER CASES	0.4~ 20	1: 50	
1/2 inch	PIPING IS HORIZONTAL AND SHAFT IS VERTICAL	0.4~ 40	1:100	2.133
	OTHER CASES	0.6~ 40	1: 65	
3/4 inch	PIPING IS HORIZONTAL AND SHAFT IS VERTICAL	0.8~ 80	1:100	2.871
	OTHER CASES	1.2~ 80	1: 65	
1 inch	PIPING IS HORIZONTAL AND SHAFT IS VERTICAL	2.0~200	1:100	5.287
	OTHER CASES	3.0~200	1: 65	

NOTES (1) The value of K-factor is only a reference value.
(2) Obtain the maximum frequency for each size by calculation.
Max. frequency (Hz) = Max. flow rate (cc/s) / K-factor (cc/pulse)

AUTOMATIC

IMPELLER FLOW METER ASSPX SERIES

CONNECTION / THREADED——Rc

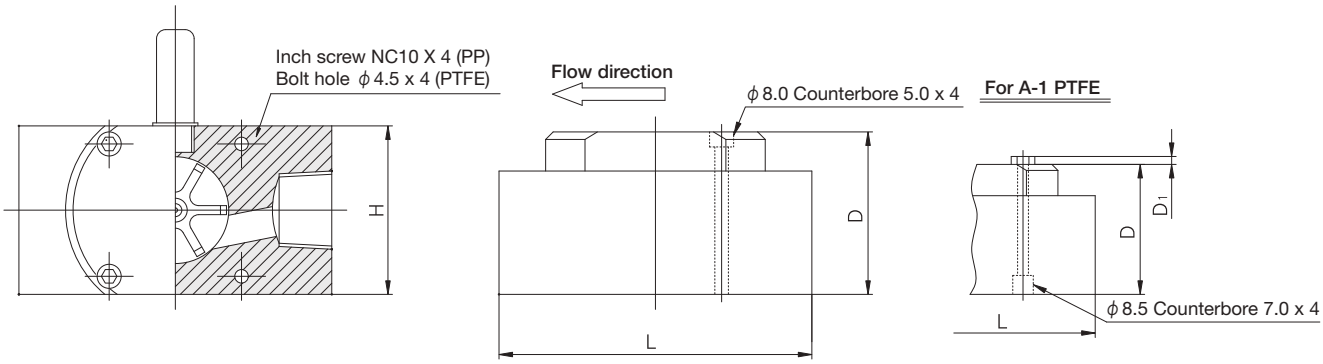

■ JIS (Unit: mm)

SIZE	SOCKET L	SOCKET H	SOCKET D	PTFE D1
RC 3/8	104	56	54	3.0
RC 1/2	104	56	54	3.0
RC 3/4	104	56	54	3.0
RC 1	104	56	54	3.0

NOTES (1) For wire extension, it is recommended to use shielded wires.
(2) For display of flow rate, an indicator is required separately.
(3) The cover attachment method varies depending on the materials.
In the case of PP, the cover is tightened using hexagon socket head cap screws (inch screws).
In the case of PTFE, it is sandwiched between hexagon socket head cap screws and inch screws. See A-1.

INSERTION ELECTROMAGNETIC FLOW METER ASEX80 SERIES

- INSERTION TYPE USING SPECIAL FITTING.
- ALL THE WETTED PARTS ARE MADE OF CHEMICAL-RESISTANT PLASTIC (SO THAT THE METER CAN BE USED FOR SEA WATER LINES AND VARIOUS CHEMICAL SOLUTION LINES).

BASIC SPECIFICATIONS

VALVE TYPE		INSERTION ELECTROMAGNETIC FLOW METER ASEX80 SERIES
SIZE		ASEX81 ····· 25mm~80mm ASEX82 ····· 100mm~150mm
CONNECTION		FLANGED, SOCKET
MATERIAL	SENSOR (DETECTOR)	BODY ····· HI-PVC ELECTRODE····· HASTELLOY C
	SENSOR	HOUSING ····· ALUMINUM
	O-RING	EPDM, FKM
	SPECIAL FITTING	U-PVC, HI-PVC
FLUID TO BE MEASURED		GENERAL CONDUCTIVE LIQUIDS. The minimum conductivity must be 20 μs/cm or higher. <Reference> Tap water 100 - 200 μs/cm
FLUID TEMPERATURE		0~50°C
WORKING PRESSURE		1.0 MPa (See TABLE 1.)
FLOW RANGE		0.2 - 6.0 m/s (See TABLE 2.)
ACCURACY		±1.0% (FS)
POWER SOURCE		DC12 - 24V (Consumption current: 250 mA)
OUTPUT SIGNAL		CURRENT SINKING PULSE (NPN) (Load capacity: DC 30V, 6 mA or less)
CABLE		4-CON SHIELD LINE (Approx. 5 m)
ELECTRIC WIRING PORT		WATER RESISTANT CONNECTOR (Applicable wire dia.: Φ8 max.)
PROTECTIVE STRUCTURE		NEMA 4X (IP65 equivalent)

NOTE During batch operation (for cumulative usage management of the fluid in particular), avoid using an insertion electromagnetic flow meter.

AUTOMATIC

TABLE 1 WORKING PRESSURE VS. TEMPERATURE

SIZE (mm)	PRESSURE (MPa)			
	20°C	30°C	40°C	50°C
25	1.0	0.9	0.7	0.3
32				
40				
50				
65				
80				
100				
125				
150				

TABLE 2 MEASURING RANGE AND K-FACTOR

SIZE (mm)	FLOW RATE (m³/h) Min	~	Max	K-FACTOR (cc/pulse)
25	0.35	~	10.60	6.76
32	0.54	~	16.29	9.94
40	0.90	~	27.13	16.12
50	1.47	~	44.10	23.09
65	2.54	~	76.12	37.11
80	3.35	~	100.53	50.15
100	5.65	~	169.56	82.92
125	8.83	~	264.94	132.10
150	12.05	~	361.43	175.44

NOTES (1) The value of K-factor is only a reference value.
(2) Obtain the maximum frequency for each size by calculation.
Max. frequency = Max. flow rate / K-factor
(Hz) (cc/s) (cc/pulse)

AUTOMATIC

INSERTION ELECTROMAGNETIC FLOW METER ASEX80 SERIES

CONNECTION / FLANGED, SOCKET——JIS

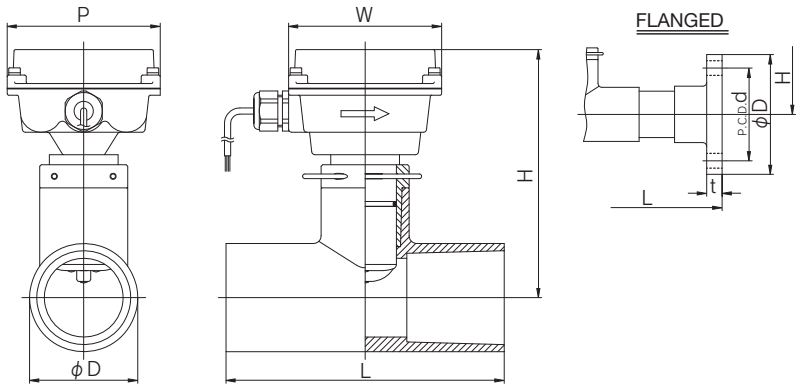

■ JIS (Unit: mm)

mm	SOCKET L	SOCKET H	FLANGED L	JIS 10K D	JIS 10K d	JIS 10K t	JIS 10K n	JIS 10K e	JIS 5K D	JIS 5K d	JIS 5K t	JIS 5K n	JIS 5K e	H	W	P
25	164	57	500	125	90	15	4	19	95	75	10	4	12	154	99	99
32	164	57	500	135	100	16	4	19	115	90	12	4	15	155	99	99
40	164	57	500	140	105	16	4	19	120	95	12	4	15	158	99	99
50	180	70	500	155	120	20	4	19	130	105	14	4	15	161	99	99
65	190	87	500	175	140	22	4	19	155	130	14	4	15	166	99	99
80	200	102	500	185	150	22	8	19	180	145	14	4	19	169	99	99
100	250	130	700	210	175	22	8	19	200	165	16	8	19	200	99	99
125	322	157	700	250	210	24	8	23	235	200	16	8	19	208	99	99
150	390	186	700	280	240	26	8	23	265	230	18	8	19	214	99	99

NOTES (1) Piping condition) It is recommended to secure a fitting installation section of at least 10D on the upper flow side and 5D in the downstream. (D = Inside pipe diameter)
Wiring condition) For wire extension, use shielded wires. (2) For display of flow rate, an indicator is required separately.
(3) The appearance and shape of assembled parts may slightly differ from the diagram depending on the sizes. (4) Note that the following fittings are not available for this flow meter:
Socket, Flange (JIS10K/JIS5K)……Material HI-PVC (125 mm, 150 mm), Material C-PVC, PVDF

ULTRASONIC FLOW METER DOPPLER ULTRASONIC FLOW METER

AUTOMATIC ASDX-25 STATIONARY

- APPLICABLE TO VARIOUS SHAPES AND TYPES, INCLUDING DITCHES, OPEN CONDUITS, HORSESHOE-SHAPED, INVERTED TRAPEZOID-SHAPED AND SQUARE-SHAPED PIPES.
- INDEPENDENT FROM THE EFFECTS OF FOREIGN SUBSTANCES OR AIR BUBBLE.
- EQUIPPED WITH DC 4 – 20 mA OUTPUT, 4 RELAY CONTACTS.
- ULTRASONIC WATER LEVEL SENSOR THAT DELIVERS STABLE PERFORMANCE WITH NO MAINTENANCE (OPTIONAL).

BASIC SPECIFICATIONS

VALVE TYPE	ASDX25
FLOW RANGE	–6m/s～6m/s
ACCURACY (FLOW RATE)	±2.00% (FS) or 0.05 m/s
WATER LEVEL MEASUREMENT	0.25～2m(AGKU2000) 0.3～8m(MSP420)
ACCURACY (WATER LEVEL)	±0.5%(FS)
WORKING TEMPERATURE RANGE	–10°C～50°C
DISPLAY	4× 20 CHARACTERS, LCD
LEVEL INPUT	DC 4～20mA
OUTPUT	DC 4 – 20 mA, RELAY CONTACT (4 CONTACTS)
CABLE LENGTH	10m(MAX 30m*)
MATERIAL	BODY ·····POLYCARBONATE (IP65) SENSOR·····POLYURETHANE/SUS (IP68)
Power supply	AC100V(AC200V*, DC24V*)
WEIGHT	APPROX. 1 kg

* Optional

AUTOMATIC ASPX-20 PORTABLE

- APPLICABLE TO VARIOUS SHAPES AND TYPES, INCLUDING DITCHES, OPEN CONDUITS, HORSESHOE-SHAPED, INVERTED TRAPEZOID-SHAPED AND SQUARE-SHAPED PIPES.
- INDEPENDENT FROM THE EFFECTS OF FOREIGN SUBSTANCES OR AIR BUBBLE.
- PORTABLE DESIGN SO THAT THE METER CAN BE USED IN VARIOUS PLACES.
- INTEGRATED WITH WATER LEVEL SENSOR, EASY TO INSTALL.

BASIC SPECIFICATIONS

VALVE TYPE	ASPX20
FLOW RANGE	–6m/s～6m/s
ACCURACY (FLOW RATE)	±2.00% (FS) or 0.05 m/s
WATER LEVEL MEASUREMENT	0～3m
ACCURACY (WATER LEVEL)	±0.5%(FS)
WORKING TEMPERATURE RANGE	–10°C～50°C
DISPLAY	4× 20 CHARACTERS, LCD
DATA LOGGER	STANDARD 512 KB (MAX. 8 MB)
OUTPUT	RS232C (Dedicated software used)
CABLE LENGTH	7m
MATERIAL	VALVE PARTS··· FRP (IP67) SENSOR····· POLYURETHANE/SUS (IP68)
Power supply	SIZE D BATTERY × 8 (Operable up to 6 months.)
WEIGHT	APPROX. 2.5 kg

ULTRASONIC FLOW METER DOPPLER ULTRASONIC FLOW METER

AUTOMATIC ASSX-30 PORTABLE

- IMPROVED NOISE RESISTANCE DUE TO DFD FUNCTION.
- RECHARGEABLE TYPE THAT REQUIRES NO POWER SUPPLY.
- SMALL TO LARGE SIZES CAN BE MEASURED BY A SINGLE UNIT.
- EASY OPERATION REQUIRING ONLY QUICK MOUNTING OF TRANSDUCER AND INNER DIAMETER INPUT.
- CAPABLE OF STORING UP TO 90,000 DATA POINTS.

BASIC SPECIFICATIONS

VALVE TYPE	ASSX-30
MEASURING RANGE	±0.06～10m/s
ACCURACY	±1.0%(FS)
APPLICABLE PIPE SIZE	12～3,000mmϕ
EXTERNAL OUTPUT	DC 4 - 20 mA (Load resistance: 800 Ω) RS232C Interface
POWER	AC100V/AC200V, rechargeable battery Operation: 12 hrs (Charge: 8 hrs)
DISPLAY	Instantaneous/integrating flow rate
TEMPERATURE RANGE	BODY (SENSOR)·····–20～60°C TRANSDUCER ·····–40～120°C
BODY (SENSOR)	NEMA–6 (IP67 equivalent)
TRANSDUCER	Clamp-on type 5 m cable (150 m Max.*)
WEIGHT	Approx. 4.9 kg
PARAMETER SETTING	Keypad entry

* Optional

AUTOMATIC ASSX-40 STATIONARY

- IMPROVED NOISE RESISTANCE DUE TO DFD FUNCTION.
- PARAMETERS CAN BE EASILY ENTERED FROM THE PANEL, ALLOWING FOR ATTACHMENT, REMOVAL AND RELOCATION.
- CAPABLE OF STORING UP TO 90,000 DATA POINTS.

BASIC SPECIFICATIONS

VALVE TYPE	ASSX-40
MEASURING RANGE	±0.06～10m/s
ACCURACY	±1.5%(FS)
APPLICABLE PIPE SIZE	12～3,000mmϕ
EXTERNAL OUTPUT	DC 4 - 20 mA (Load resistance: 1 KΩ or less) RS232C Interface Relay contact output*
POWER	AC90-132V(50/60Hz)/AC190-250V(50/60Hz) Switch select type DC12-18V*
DISPLAY	Instantaneous/integrating flow rate
TEMPERATURE RANGE	BODY (SENSOR)·····–20～60°C TRANSDUCER ·····–40～120°C
BODY (SENSOR)	NEMA-4X (IP65 equivalent)
TRANSDUCER	Clamp-on type 6 m cable (150 m Max.*)
WEIGHT	Approx. 5.4 kg
PARAMETER SETTING	Keypad entry / Entry from PC using dedicated software

* Optional

ULTRASONIC FLOW METER TIME DIFFERENCE ULTRASONIC FLOW METER

AUTOMATIC ASISTT-D6000 (S/M/L) STATIONARY

- PARAMETERS CAN BE EASILY ENTERED FROM THE PANEL, ALLOWING FOR ATTACHMENT, REMOVAL AND RELOCATION.
- DEPENDING ON THE PIPE SIZE, 3 TYPES ARE AVAILABLE: ASISTT-D6000S (25 mm – 200 mm)
  ASISTT-D6000M (250 mm – 500 mm)
  ASISTT-D6000L (550 mm – 3,000 mm)

BASIC SPECIFICATIONS

TYPE	ASISTT-D6000(S/M/L)
MEASURING RANGE	±0 – 15 m/s (positive/negative direction indicated)
ACCURACY	±0.8%(FS)
LINEARITY	±0.1%(FS)
REPRODUCIBILITY	±0.2%(FS)
APPLICABLE PIPE SIZE	S ·····25mm～200mmϕ M ·····250mm～500mmϕ L·····550mm～3,000mmϕ
EXTERNAL OUTPUT	DC 4 - 20 mA (Load resistance: 1 KΩ or less) RS232C Interface Relay contact output*

* Optional

POWER	AC90-132V(50/60Hz)/AC190-250V(50/60Hz) Switch select type
DISPLAY	Instantaneous/integrating flow rate, flow velocity
TEMPERATURE RANGE	BODY (SENSOR)·····–20～60°C TRANSDUCER ·····–40～120°C (240°C Max.*)
BODY (SENSOR)	NEMA-4X (IP65 equivalent)
TRANSDUCER	Clamp-on type 9 m cable (300 m Max.*)
WEIGHT	Approx. 5.4 kg
PARAMETER SETTING	Keypad entry / Entry from PC using dedicated software

AUTOMATIC ASISTT-D7000 PORTABLE

- UNIQUE SIGNAL PROCESSING REDUCES THE EFFECTS OF FLUID CONDITIONS.
- RECHARGEABLE TYPE THAT REQUIRES NO POWER SUPPLY.
- EQUIPPED WITH BUILT-IN DATA LOGGER.
- IDEAL FOR PUMP CAPACITY CHECK AND BACK-UP OF EXISTING FLOW METER.

BASIC SPECIFICATIONS

TYPE	ASISTT-D7000
MEASURING RANGE	±0 – 15 m/s (positive/negative direction indicated)
ACCURACY	±0.8%(FS)
LINEARITY	±0.1%(FS)
REPRODUCIBILITY	±0.2%(FS)
APPLICABLE PIPE SIZE	25～3,000mmϕ
EXTERNAL OUTPUT	DC 4 - 20 mA (Load resistance: 1 KΩ or less) RS232 interface
POWER	AC100V/AC200V, rechargeable battery Operation: 8 hrs (Charge: 12 hrs)

* Optional

DISPLAY	Instantaneous/integrating flow rate, flow velocity
TEMPERATURE RANGE	BODY (SENSOR)·····–20～60°C TRANSDUCER ·····–40～120°C (240°C Max.*)
BODY (SENSOR)	NEMA–6 (IP67 equivalent)
TRANSDUCER	Clamp-on type 5 m cable (300 m Max.*)
WEIGHT	Approx. 5.0 kg
PARAMETER SETTING	Keypad entry

AUTOMATIC ASISTT-D9000 AFFORDABLE TYPE

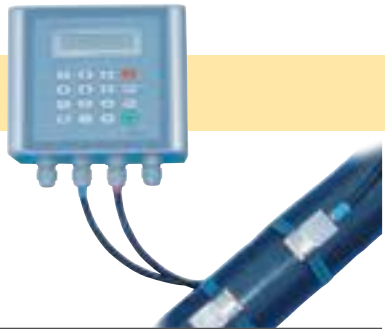

- LIGHTWEIGHT AND COMPACT SIZE
- EQUIPPED WITH NUMERIC KEYPAD, ALLOWING SETTINGS TO BE CONFIGURED USING THE MAIN UNIT (SENSOR).

BASIC SPECIFICATIONS

TYPE	ASISTT-D9000
MEASURING RANGE	±0～12m/s
ACCURACY	±1.0% (FS)
LINEARITY	±0.2% (FS)
REPRODUCIBILITY	±0.3% (FS)
APPLICABLE PIPE SIZE	25～3,000mmϕ
EXTERNAL OUTPUT	DC4～20mA
POWER	AC90V～AC245V DC10V～DC36V*

* Optional

DISPLAY	Instantaneous/integrating flow rate, flow velocity
TEMPERATURE RANGE	BODY (SENSOR)·····–40～60°C TRANSDUCER ·····–40～100°C (150°C Max.*)
BODY (SENSOR)	NEMA-4X (IP66 equivalent)
TRANSDUCER	Clamp-on type 9 m cable (300 m Max.*)
WEIGHT	Approx. 3.5 kg
PARAMETER SETTING	Keypad entry